FANMASTER

COOLING HEATING VENTILATION EXTRACTION

INSTRUCTION MANUAL

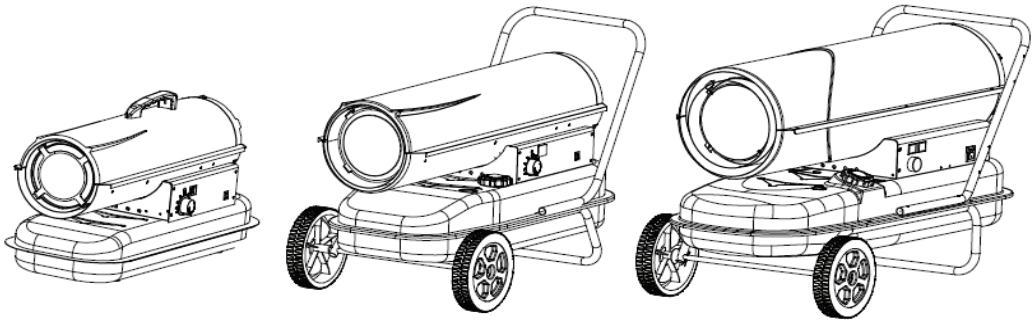

INDUSTRIAL DIESEL FAN HEATER (DIRECT-FIRED)

MODEL: IDH2-20, IDH2-30, IDH2-50

FOR INDUSTRIAL USE ONLY
ADEQUATE VENTILATION REQUIRED

TO PREVENT SERIOUS INJURY, READ & UNDERSTAND ALL WARNINGS & INSTRUCTIONS BEFORE USE. PLEASE KEEP THIS DOCUMENT FOR YOUR RECORDS

FOR YOUR INFORMATION

Thank you for purchasing a Fanmaster diesel heater. Please read this instruction manual carefully before using this heater.

Disclaimer:
Fanmaster reserves the right to make alterations to specifications, quantities, dimensions, for production or other reasons, subsequent to publication.
While we believe the information is accurate and complete, we make no warranty or representation for any particular purposes. The information is offered in good faith and with the understanding that any use of the units or accessories in breach of the directions and warnings in this document is at the sole discretion and risk of the user

Disposal Guidelines:
Do not dispose of this product with general household waste. This product must be disposed according to the laws governing Waste Electrical and Electronic Equipment. If required, contact your local authorities for information regarding the available disposal facilities.

1. GENERAL SAFETY RULES & WARNINGS

- **PLEASE READ INSTRUCTIONS CAREFULLY.**
- **PLACE INSTRUCTION MANUAL IN A SAFE PLACE FOR FUTURE REFERENCE. DO NOT ALLOW ANYONE WHO HAS NOT READ THESE INSTRUCTIONS TO ASSEMBLE, ADJUST OR OPERATE THIS HEATER.**
- **IF THE INFORMATION IN THIS MANUAL IS NOT FOLLOWED EXACTLY, A FIRE OR EXPLOSION MAY RESULT IN CAUSING PROPERTY DAMAGE, SERIOUS INJURY OR LOSS OF LIFE.**
- **FAILURE TO COMPLY WITH THE PRECAUTIONS AND INSTRUCTIONS PROVIDED WITH THIS HEATER, CAN RESULT IN DEATH, SERIOUS INJURY AND PROPERTY LOSS OR DAMAGE FROM HAZARDS OF FIRE, EXPLOSION, BURN, ASPHYXIATION, CARBON MONOXIDE POISONING, AND/OR ELECTRICAL SHOCK.**
- **ONLY PERSONS WHO CAN UNDERSTAND AND FOLLOW THE INSTRUCTIONS SHOULD USE OR SERVICE THIS HEATER. IF YOU NEED ASSISTANCE OR REQUIRE HEATER INFORMATION SUCH AS AN INSTRUCTION MANUAL, LABELS, ETC. CONTACT FANMASTER.**
- **ADEQUATE VENTILATION IS REQUIRED. DO NOT USE IN ENCLOSED ENVIRONMENTS.**
- **UNVENTED PORTABLE HEATERS USE AIR (OXYGEN) FROM THE EXISTING AREA. ADEQUATE COMBUSTION & VENTILATION AIR MUST BE PROVIDED.**
- **DO NOT STORE OR USE GASOLINE, PETROL OR ANY OTHER FLAMMABLE OR COMBUSTIABLE VAPORS AND LIQUIDS IN THE VICINITY OF THIS HEATER.**
- **FIRE, BURN, INHALATION, AND EXPLOSION HAZARD. KEEP SOLID COMBUSTIBLES, SUCH AS BUILDING MATERIALS, PAPER OR CARDBOARD, A SAFE DISTANCE AWAY FROM THE HEATER AS RECOMMENDED BY THE INSTRUCTIONS. NEVER USE THE HEATER IN SPACES WHICH DO OR MAY CONTAIN VOLATILE OR AIRBORNE COMBUSTIBLES, OR PRODUCTS SUCH AS GASOLINE, SOLVENTS, PAINT THINNER, DUST PARTICLES OR UNKNOWN CHEMICALS**
- **DIRECT-FIRED HEATERS MAY CAUSE CARBON MONOXIDE (CO) POISONING WHEN INCORRECTLY USED, E.G INDOORS WITHOUT ADEQUATE AIR CIRCULATION, OR IF NOT PROPERLY WORKING. CO POISONING MAY LEAD TO DEATH.**
- **NOT FOR DOMESTIC OR RECREATIONAL VEHICLE USE**
- **THE ELECTRICAL SYSTEM TO WHICH THE APPLIANCE IS CONNECTED MUST COMPLY WITH LOCAL REGULATIONS. A RESIDUAL-CURRENT DEVICE (RCD) MUST BE INSTALLED.**
- **UNPLUG THE APPLIANCE BEFORE PERFORMING ANY MAINTENANCE OPERATIONS.**
- **ALWAYS CHECK THE POWER CABLE BEFORE USING THE APPLIANCE. IT MUST NOT BE BENT, TAUT, STRETCHED, CRUSHED OR ANY WAY DAMAGED.**
- **IF THE POWER CORD AND/OR PLUG IS DAMAGED, IT MUST BE REPLACED BY FANMASTER, A SERVICE AGENT OR A QUALIFIED PERSONS.**
- **THE FRONT OUTLET IS VERY HOT DURING OPERATION. DO NOT TOUCH! BURN DANGER.**
- **DO NOT LEAVE THE HEATER UNATTENDED WHEN IN USE.**
- **NEVER USE THE HEATER WITH WET HANDS OR WHEN EITHER THE HEATER OR THE POWER CABLE IS WET.**
- **CHILDREN SHOULD BE SUPERVISED TO ENSURE THAT THEY DO NOT PLAY WITH THE HEATER.**
- **THE HEATER IS NOT INTENDED FOR USE BY PERSONS (INCLUDING CHILDREN) WITH REDUCED PHYSICAL, SENSORY OR MENTAL CAPABILITIES, OR LOCK OF EXPERIENCE & KNOWLEDGE.**

2. PRODUCT DESCRIPTION & SPECIFICATIONS

PRODUCT DESCRIPTION

Industrial diesel or kerosene direct fired portable space/fan heater with open combustion chamber.

SPECIFICATIONS

MODEL	IDH2-20	IDH2-30	IDH2-50
Heat Output*	20KW 68,240 BTU	30KW 102,360 BTU	50KW 170,600 BTU
Air Flow (L/s)	153	200	305
Fuel Type	Diesel or Kerosene	Diesel or Kerosene	Diesel or Kerosene
Fuel Consumption (L/h)	1.9	2.8	4.7
Fuel Nozzle Size (gph)	0.50	0.80	1.20
Voltage (V/Hz)	AC220-240V/50	AC220-240V/50	AC220-240V/50
Air Pressure Setting (bar)	0.32	0.31	0.38
Current Rating (A)	1.1	1.1	1.5
Electrical Power (W)	230	230	340
Fuse Rating	T3.15A	T3.15A	T3.15A
Net Weight (kg)	14	21	27
Dimensions (mm)	750(L)*315(W)*415(H)	880(L)*456(W)*590(H)	1090(L)*490(W)*585(H)
Tank Capacity (L)	19	38	56
Operating Range (H)	~10	~13	~12
Standard Accessories			
Fuel Gauge	Yes	Yes	Yes
Handle	Yes	Yes	Yes
Ambient Thermostat	Built-in	Built-in	Built-in
Malfunction detection light	Built-in	Built-in	Built-in

*Based on Gross Calorific Value (Hrs)

3. ASSEMBLING INSTRUCTIONS

Remove the heater from the carton. If the heater is damaged, please contact Fanmaster or where you purchased the heater from.

IDH2-20: This heater only requires to install the plastic handle (see Fig 1.)

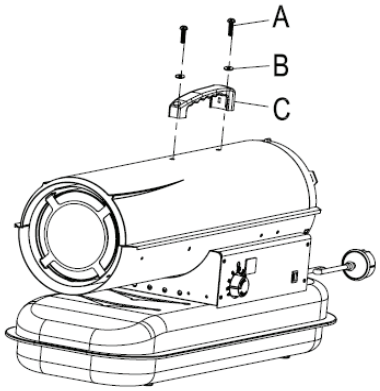

Fig 1.

Pos.	Description	Qty
A	Screw	2
B	Washer	2
C	Handle	1

IDH2-30 & IDH2-50: The following parts are supplied in the carton

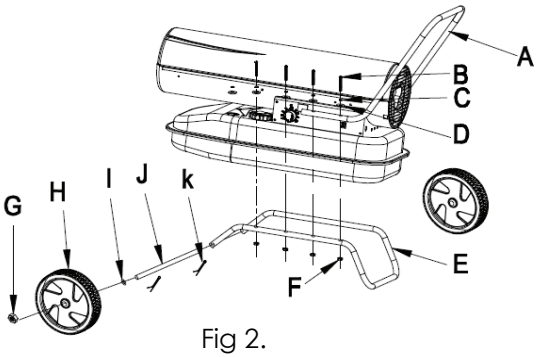

Fig 2.

Pos.	Description	Qty
A	Handle	1
B	Screw	6 or 8
C	Spring Washer	6 or 8
D	Plain Washer	6 or 8
E	Feet pipe Assembly	1
F	Nut M5	6 or 8
G	Nut M12	2
H	Wheels	2
I	Plain Washer 12	2
J	Wheel Shaft	1
K	Cotter Pin	2

To assemble the heater, proceed as follows (see Fig 2.)

1. Insert the wheel shaft (J) to the corresponding holes of the feet pipe assembly (E).
2. Insert the cotter pin (K) to the corresponding holes. Put plain washer (I) to the two sides of the shaft, slide the wheel (H) over the wheel shaft, screw the nut (G) to fix the wheel on the shaft.
3. Put the heater body on the feet pipe assembly, line up the 4 holes of the handle (A) ensuring handle is at the back of the heater, ensure holes line up with the feet pipe assembly.
4. Using the screws (B), sping washer (C), plain washer (D) and nuts (F) fix the feet pipe assembly & handle to the tank.

4. OPERATING INSTRUCTIONS

- Position the heater on a flat, level, non-flammable & solid surface.
- Direct-fired heaters are intended for use in outdoor open areas or in indoor well ventilated areas. For indoor use, provide permanent ventilation openings of at least 25 cm^2/kW, equally distributed between floor and high level, with a minimum of 250 cm^2.

	IDH2-20	**IDH2-30**	**IDH2-50**
Minimum Opening Size	600cm2	800cm2	1250cm2

- Only position the heater in the normal upright position (on the wheels)
- Do not place the heater near walls, corners or low ceilings.
- Do not place the heater below a power socket outlet.
- Do not place the heater on moving vehicles or where it can tip over.
- Keep the heater away from flammable, combustible, explosive or corrosive materials.
- Keep the heater away from curtains or similar materials that could block the air inlet and outlet.
- Never block or restrict the air inlet and outlet for any reason.
- Keep the power cable away from heat sources, sharp edges, cutting and moving parts.
- Do not expose directly to the weather or to excessive humidity.
- Do not place the heater in the immediate surroundings of a bath, shower or swimming pool.
- Ensure the following minimum safety clearances from materials or objects in the surroundings of the heater:
  Side: 0.6m
  Air inlet side: 1m
  Top: 1.5m
  Hot air outlet side: 3m
- Do not connect direct-fired heaters to air ducts

4. OPERATING INSTRUCTIONS - CONTINUED

START-UP

- Fill the tank with clean fuel. Only use Diesel or Kerosene
- The fuel gauge on top of the tank allows you to check the fuel level
- Connect the plug to the relevant power source

IDH2-20 & IDH2-30

- The power indicator will light up & the ambient temperature will display.
- Push the power switch to "ON".
- If the thermostat control knob setting temperature is higher than the ambient temperature, the electrodes will start sparking & after 7 seconds the heater will start.
- If the thermostat control knob setting is lower than the ambient temperature, turn the thermostat control knob to the desired temperature setting. The electrodes will start sparking & after 7 seconds the heater will start.

IDH2-50

- The left display will show "- -", the right display will show the ambient temperature.
- Push the power switch to "ON".
- The default temperature setting is 20'C (left display)
- If the ambient temperature is lower than the default temperature, the electrodes will start sparking & after 7 seconds the heater will start.
- If the ambient temperature is higher than the default temperature, turn the thermostat control knows to desired temperature. the electrodes will start sparking & after 7 seconds the heater will start.

COLD START-UP

In low temperature, in Alpine/Highland/Inland regions, unseasonably cold weather. Block the air vent hole on the air pump (see Fig. 4) by using your finger during ignition to make start-up easier.

ABNORMAL OPERATION:

In case of malfunction (flame failure, reduced air flow, bad combustion) the heater stops and the indicator light starts FLASHING (THE LOCK-OUT MODE code will be showed on the display window).

4. OPERATING INSTRUCTIONS - CONTINUED

MANUAL RESET/RESTART

If the heater is in lock-out mode, check and remove the cause of lock-out before restarting the heater. To reset, turn the ON/OFF switch to 0 and then again to I. If problem continues please contact Fanmaster. Turning the thermostat control knob will NOT reset the heater.

SHUTDOWN

Move switch to “OFF” (O) position.

- Never disconnect the heater from mains to stop it while in operation.
- Always allow the cooling sequence to be completed, otherwise the residual heat could damage internal components.
- Do not cover the heater. Do not block the air inlet and outlet.
- The heater outlet is very hot during operation and after use. Do not touch! Use personal protecting equipment if needed.
- Unplug the heater before moving it. Never pull the cable to unplug or move the unit.

5. CLEANING, MAINTENANCE & STORAGE

Please refer to the Maintenance Schedule & Logbook that came with this heater.

- Before starting any maintenance task, shut down, unplug and let the heater cool down for at least 15 minutes.
- Do not attempt any electrical repair yourself. If the heater needs service or repair, contact a qualified person.
- When cleaning, make sure that water does not enter the unit.
- Do not open the enclosure to clean the inner parts. Do not spray water into the heater.
- Never use solvents, gasoline, toluene and similar aggressive chemicals to clean the heater.

Regularly wipe the enclosure using a soft sponge or cloth. For very dirty parts, use a sponge wetted with lukewarm water and a mild detergent, then dry using a clean cloth. Keep air inlet and fan free from dust and dirt. To clean inner parts, gently blow compressed air through air inlet. Regularly inspect the power cable: if worn, cracked or damaged have it replaced by a qualified persons only.
Before storing the heater, make sure it is perfectly cool and dry. Cover the unit with a blanket or tarp and store it in a dry, ventilated plac

The following checks are recommended before every seasonal use:

Nozzle
Carefully unscrew nozzle from nozzle fitting. Blow compressed air through nozzle orifice to free it from dirt. Replace nozzle if necessary.

Air Filters
Clean air filters. Remove filter end cover (11), wash air intake filter (10) using a light detergent and dry it thoroughly before re-installing. Replace air delivery filter (9) once a year (Fig.3)

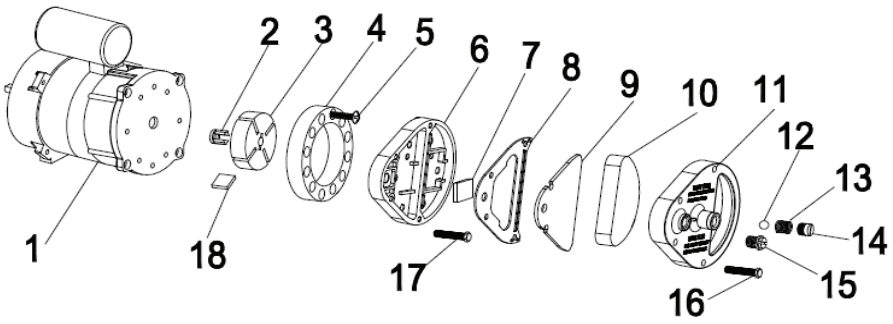

Fig 3.

5. CLEANING, MAINTENANCE & STORAGE - CON

Air Pump Pressure Adjustment (Fig 4.)

The Air Pump pressure is factory set and must be checked and adjusted by qualified technicians only. Tampering with the unit may be dangerous.

Remove pressure gauge cap. Connect a pressure gauge on the pressure measuring port on the rear guard. Start heater and read air pressure value. If necessary adjust pressure to the correct value turning the adjusting screw (the air vent hole in the adjusting screw middle) clockwise to increase, anticlockwise to decrease the pressure:

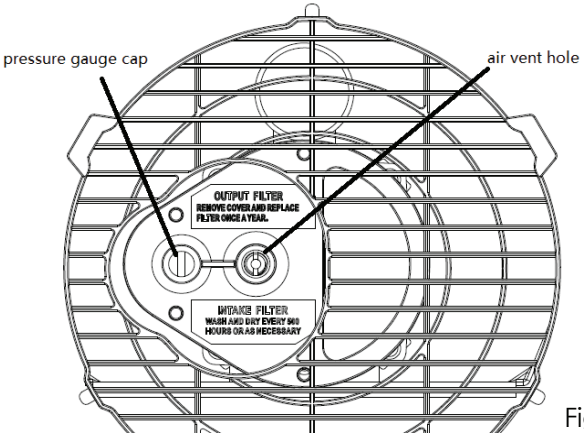

Fig 4.

Model	Air Pressure (bar)
IDH2-20	0.32
IDH2-30	0.31
IDH2-50	0.38

Ignition Electrodes (qualified perons only)

Clean, adjust, & if necessary replace ignition electrode. For electrode gaps see Fig.4-5 (dimensions in mm)

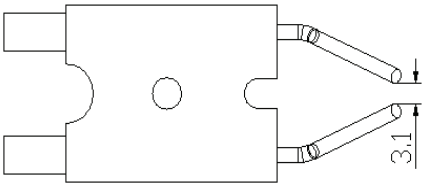

Fig 5.

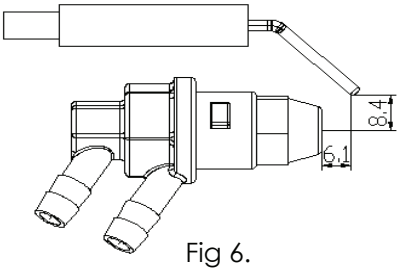

Fig 6.

6. WIRING DIAGRAM

WIRING DIAGRAM: IDH2-20 & IDH2-30

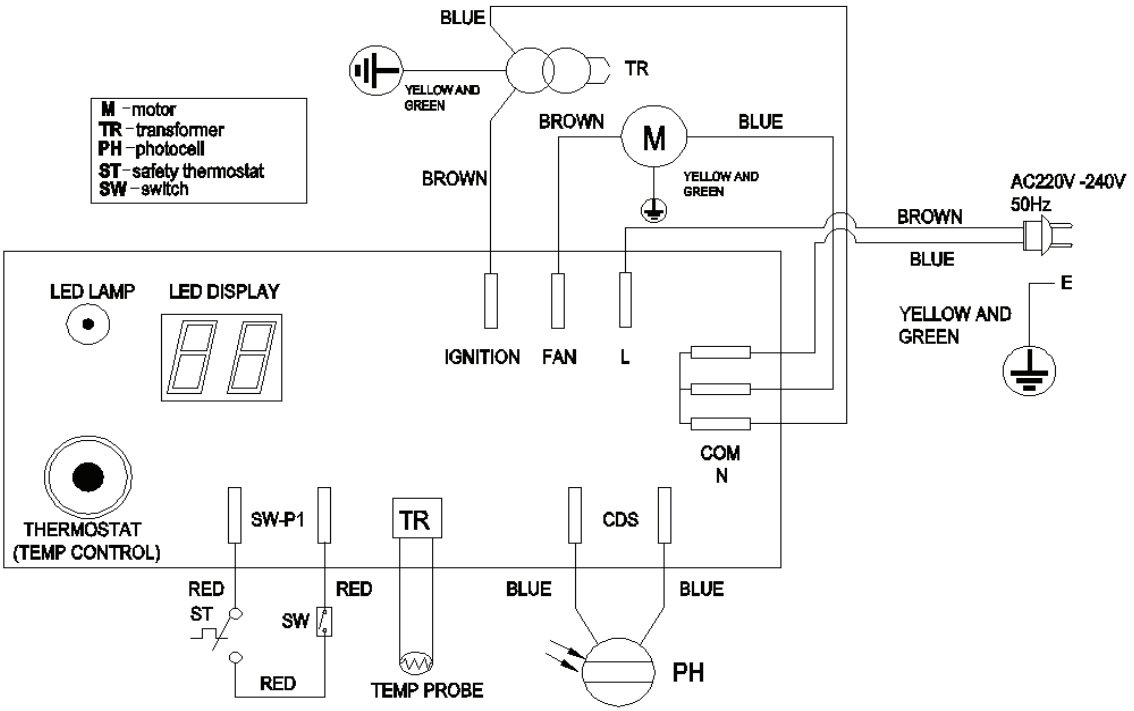

WIRING DIAGRAM: IDH2-50

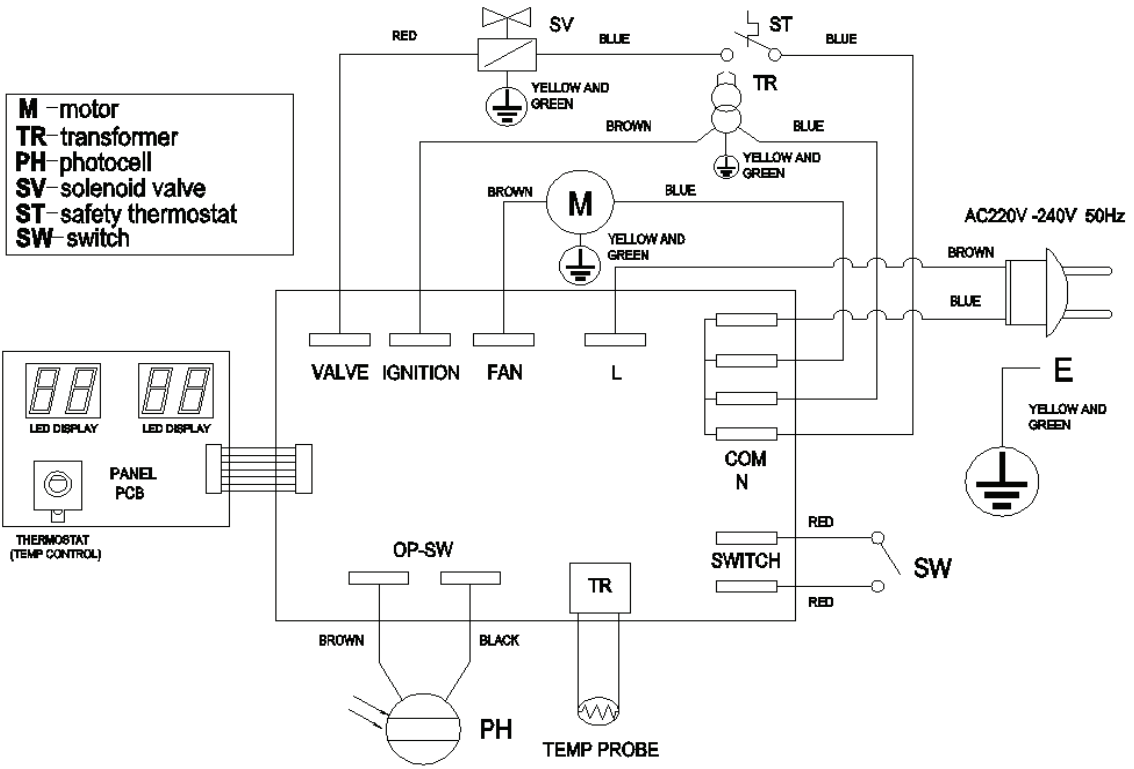

7. PARTS BREAKDOWN

IDH2-20

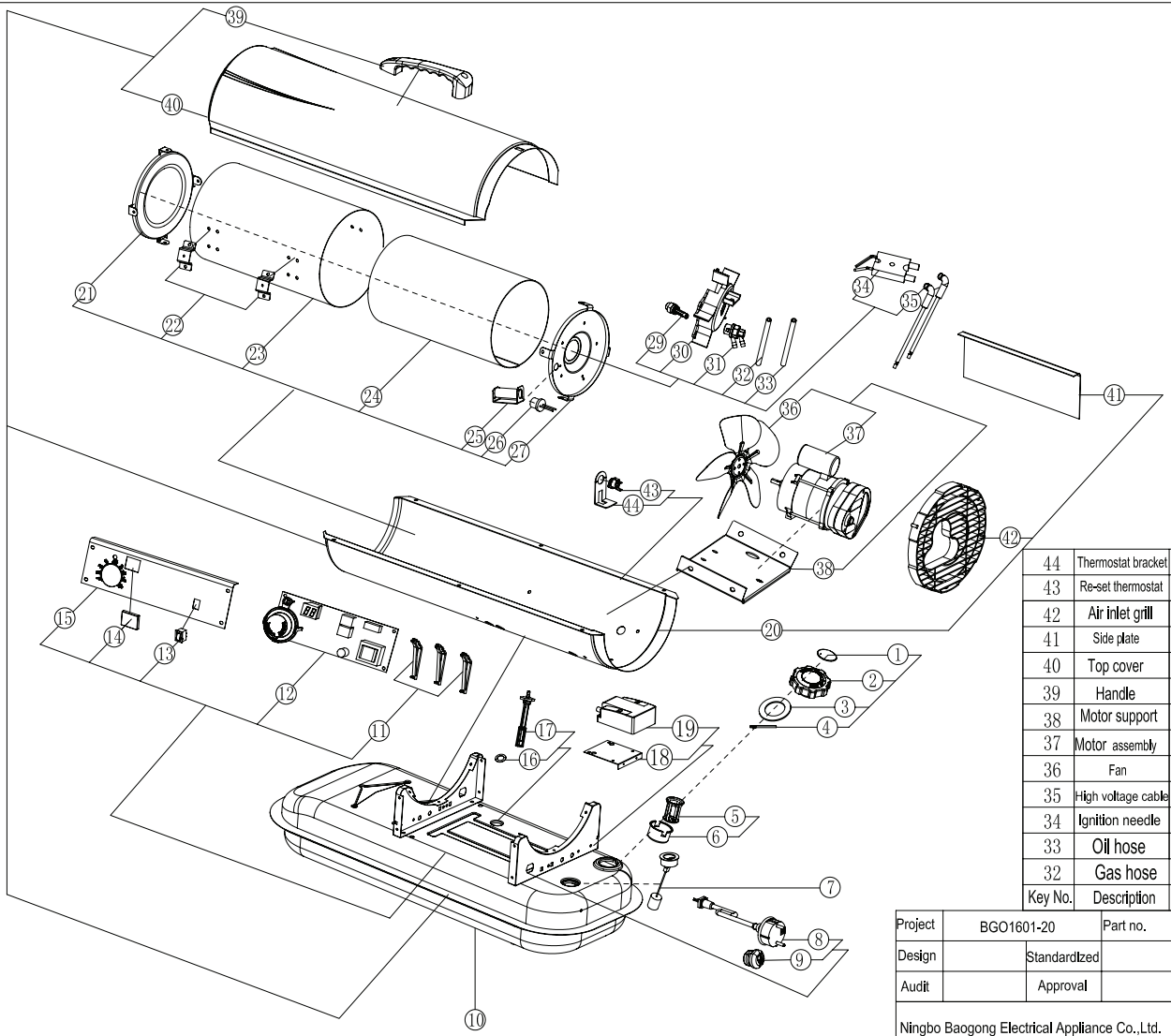

Key No.	Description	Quantity
44	Thermostat bracket	1
43	Re-set thermostat	1
42	Air inlet grill	1
41	Side plate	1
40	Top cover	1
39	Handle	1
38	Motor support	1
37	Motor assembly	1
36	Fan	1
35	High voltage cable	1
34	Ignition needle	1
33	Oil hose	1
32	Gas hose	1

Key No.	Description	Quantity
31	Nozzle Adapter	1
30	Nozzle Adapter Bracket assembly	1
29	Nozzle assembly	1
28	air inlet blade	2
27	Burner support plate	1
26	Photocell assembly	1
25	Photocell assembly bracket	1
24	Combustion chamber	1
23	Heat insulation casing	1
22	Heat Insulation casing bracket	4
21	Air outlet cover assembly	1
20	Bottom casing	1
19	Ignition transformer	1
18	Bracket of Ignition transformer	1
17	Fuel filter	1
16	Sealing ring	1
15	Control panel	1
14	Display window	1
13	On/off switch	1
12	Power PCB	1
11	PCB support	3
10	Fuel tank	1
9	Cable fastener	1
8	Power cord	1
7	Oil leveler	1
6	Oil inlet filter holder	1
5	Oil inlet filter	1
4	Tank cap shaft	1
3	Sealing ring	1
2	Fuel tank cap	1
1	Breaith cover	1

Project	BGO1601-20	Part no.	Quantity		Material	
Design		Standardlzed	Units	m m		
Audit		Approval	Proportion			
Ningbo Baogong Electrical Appliance Co.,Ltd.			Model number	explode drawing		
			Drawing number			

7. PARTS BREAKDOWN - CONTINUED

IDH2-30

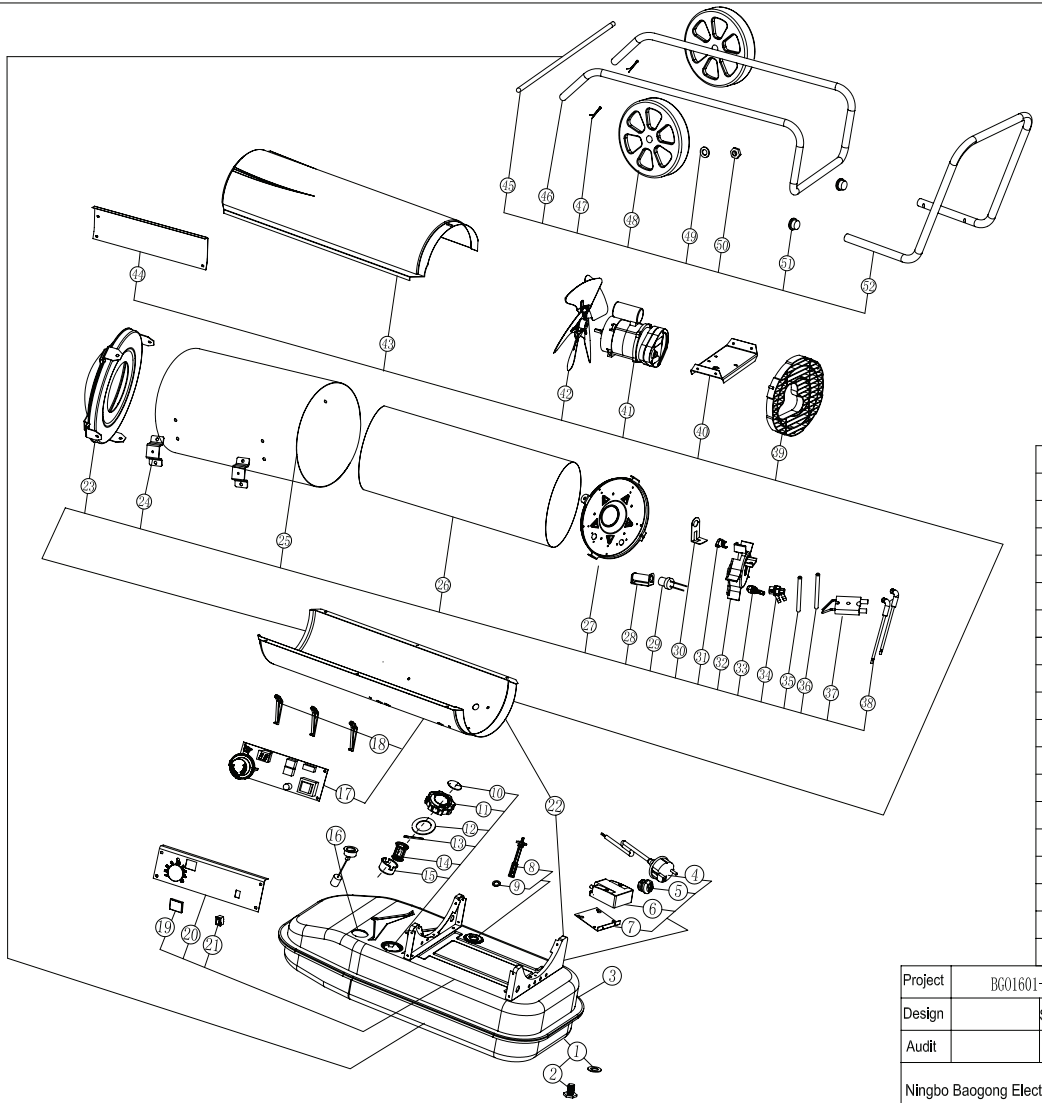

Key No.	Description	Quantity
52	Handle	1
51	Steel pipe plug	2
50	Screw nut	2
49	Flat gasket	2
48	Wheel	2
47	Cotter pin	2
46	Feet pipe	1
45	wheel axle	1
44	Side plate	1
43	Top cover	1
42	Fan	1
41	Motor assembly	1
40	Motor support	1
39	Air inlet grill	1
38	High voltage cable	2
37	Ignition needle	1
36	Oil hose	1
35	Gas hose	1

Key No.	Description	Quantity
34	Nozzle Adapter	1
33	Nozzle assembly	1
32	Flame plate	1
31	Re-set thermostat	1
30	Re-set thermostat bracket	1
29	Photocell assembly	1
28	Photocell assembly bracket	1
27	Burner support plate	1
26	Combustion chamber	1
25	Heat insulation casing	1
24	Heat insulation casing bracket	4
23	Air outlet cover assembly	1
22	Bottom casing	1
21	On/off switch	1
20	Control panel	1
19	Display window	1
18	PCB bracket	3
17	Power PCB	1
16	Oil leveler	1
15	Oil inlet filter	1
14	Oil inlet filter holder	1
13	Tank cap shaft	1
12	Sealing ring	1
11	Fuel tank cap	1
10	Breath cover	1
9	Sealing ring	1
8	Fuel filter	1
7	Bracket of Ignition transformer	2
6	Ignition transformer	1
5	Cable fastener	1
4	Power cord	1
3	Fuel tank	1
2	Oil drain screw	1
1	Oil drain seal ring	1

Project	BG01601-30		Part no.	Quantity		Material	
Design		Standardized		Units	m m		
Audit		Approval		Proportion			
Ningbo Baogong Electrical Appliance Co.,Ltd.				Model number	explode drawing		
				Drawing number			

7. PARTS BREAKOWN - CONTINUED

IDH2-50

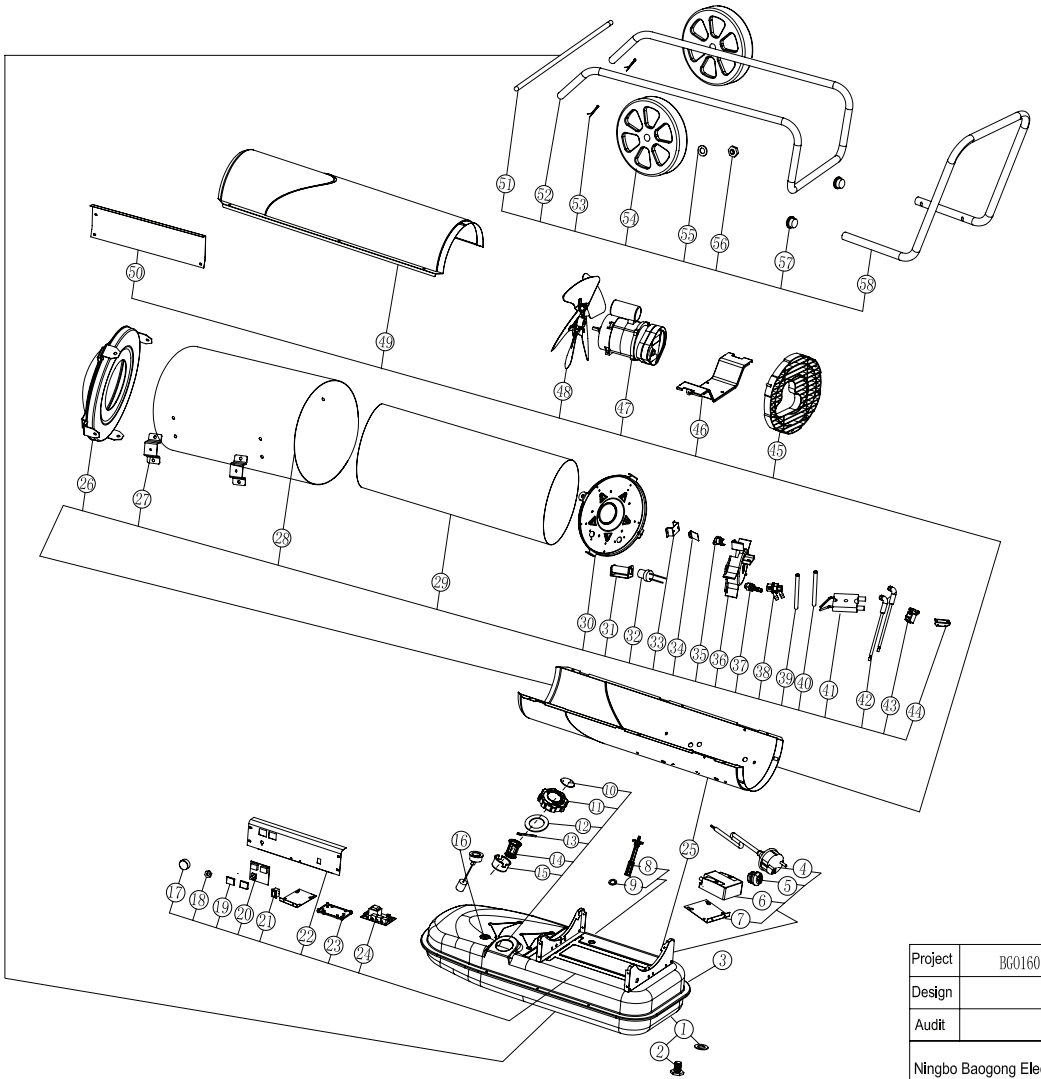

Key No.	Description	Quantity
58	Handle	1
57	Steel pipe plug	2
56	Screw nut	2
55	Flat gasket	2
54	Wheel	2
53	Cotter pin	2
52	Feet pipe	1
51	wheel axle	1
50	Side plate	1
49	Top cover	1
48	Fan	1
47	Motor assembly	1
46	Motor support	1
45	Air inlet grill	1
44	Solenoid valve bracket	1
43	Solenoid valve	1
42	High voltage cable	2
41	Ignition needle	1
40	Oil hose	1
39	Gas hose	1
38	Nozzle Adapter	1
37	Nozzle assembly	1
36	Flame plate	1
35	Re-set thermostat	1
34	Blade	2
33	Re-set thermostat bracket	1
32	Photocell assembly	1
31	Photocell assembly bracket	1
30	Burner support plate	1
29	Combustion chamber	1
28	Heat insulation casing	1
27	Heat Insulation casing bracket	4
26	Air outlet cover assembly	1
25	Bottom casing	1
24	Power PCB1	1
23	PCB support	1
22	Control panel	1
21	On/off switch	1
20	Display PCB2	1
19	Display window	1
18	Fixing nut	1
17	Thermostat knob	1
16	Oil leveler	1
15	Oil inlet filter	1
14	Oil inlet filter holder	1
13	Tank cap shaft	1
12	Sealing ring	1
11	Fuel tank cap	1
10	Breath cover	1
9	Sealing ring	1
8	Fuel filter	1
7	Bracket of Ignition transformer	2
6	Ignition transformer	1
5	Cable fastener	1
4	Power cord	1
3	Fuel tank	1
2	Oil drain screw	1
1	Oil drain seal ring	1

Project	BG01601-50	Part no.	Quantity		Material
Design		Standardlzed	Units	m m	
Audit		Approval	Proportion		
Ningbo Baogong Electrical Appliance Co.,Ltd.			Model number	explode drawing	
			Drawing number		

8. TROUBLESHOOTING

PROBLEM	CAUSE	SOLUTION
Motor does not start E1 displayed on the screen	No power or low voltage	Check power supply & voltage
		Check fuse & replace if necessary
	Faulty or damaged power cord	Check & replace
	Faulty motor/capacitor	Check & if necessary replace
	Lock-out mode due to previous overheating	Detect the cause of overheating. Shut the heater down. Check air inlet & outlet. Wait 5 minutes & restart the heater.
E2 displayed on the screen	The temperature probe is faulty or the connector is loose	Check & replace
		Check & replace PCB if needed
Motor runs but the heater does not ignite & locks out after a short time. E1 displayed on the screen	Empty fuel tank, dirty or wrong fuel	Check fuel level, fill the tank with clean diesel or kerosene if required. Remove wrong or dirty fuel.
	Fuel filters clogged	Clean or replace fitlers
	Air leaks in fuel line	Check fuel lines, connections are tight, no cracks. Replace if required
	Fuel Nozzle clogged	Clean nozzle by blowing compressed air or replace if required
	Fuel viscosity increased at low temperature	Blend diesel with kerosene
Flame comes out of body E1 displayed on the screen	Insufficient air flow into combustion chamber	Check air pump, air inlet, fan & motor
	Air pressure too high	Check air pump pressure
Heater stops during operation Ambient temperature displayed on the screen	The room temperature set has been acheived	Adjust the thermostat control knob clockwise for higher setting
Heater stops during operation E1 displayed on the screen	Flame failure	Check & remove the cause(s) of the malfunction Reset, turn the ON/OFF switch to 0 and then again to I.
	Bad combustion	
	Reduced air flow	
	Overheating	

8. TROUBLESHOOTING - CONTINUED

NO	REASON	PROCESS	SOLUTION
1	Fuel Exhausted	Check Fuel	Remove the fuel cap & add enough fuel.
2	Thermostat cut-out	Check Thermostat	Using a mult-meter, check both ends of thermostat. If there is a resistance value showing the thermostat is working. If there is no resistance, replace thermostat. 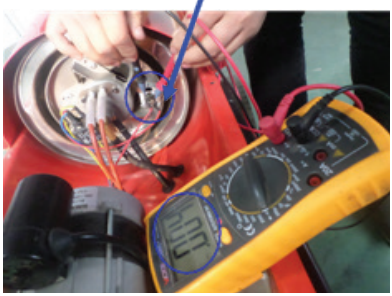
3	Photocell break down	Check Photocell assembly	Pull out the photocell & let it sense light. Using a multi-meter connect both ends, if there is no resistance showing the photocell is good. If there is a resistance replace. 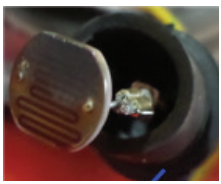

8. TROUBLESHOOTING - CONTINUED

NO	REASON	PROCESS	SOLUTION
4	Motor not working	Check Motor Condition	Open the control panel. Using a multi-meter check motor circuit. 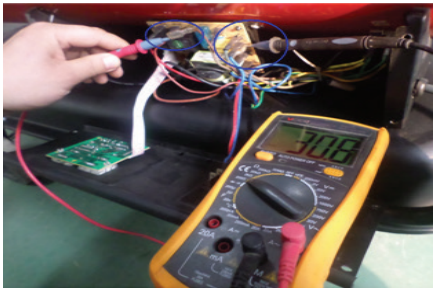
5	Air Line Leakage	Check Air Line	Take out the air line. Carefully check the line surface. Replace if there are any cracks or damages. 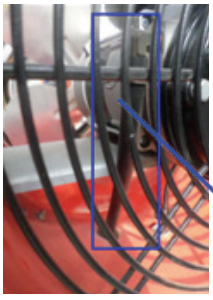 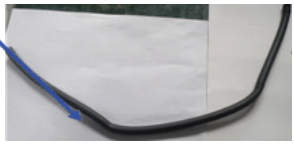
6	Fuel Filters Blocked	Check Fuel Filters	Tale out the fuel filter. If blocked clean it out then rinse & soak in diesel or kerosene. If blockage is too thick, replace fuel filter. 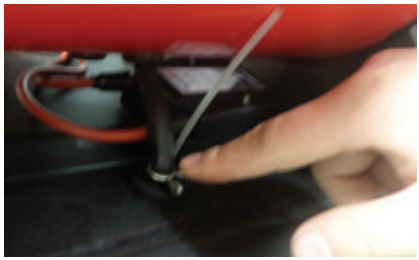

8. TROUBLESHOOTING - CONTINUED

NO	REASON	PROCESS	SOLUTION
7	Air Pump Leakage	Check Air Pump	Connect a pressure gauge. While the heater is running block the air outlet & pressure adjusting point. If the pressure gauge needle reaches 14PSI the air pump is good. If it fails to reach this point, replace air pump. Factory setting is 5-6 PSI 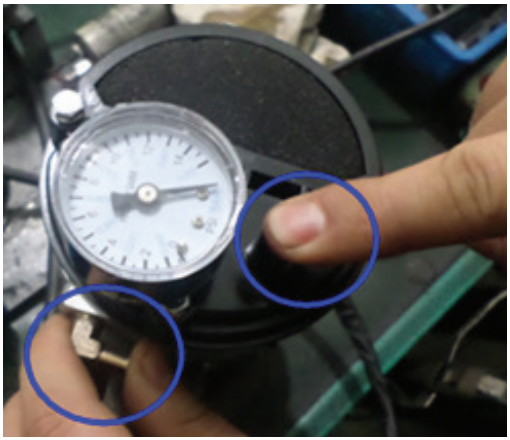
8	Fuel Nozzle Blocked	Check & Clean the nozzle	If there is black smoke or flash fire, check & clean fuel nozzle, if the same symptoms keep occuring replace the fuel nozzle.
9	Prob damage (E2)	Check probe	Open the control panel, check the condition of the probe & connection point. If the probe end is damaged replace it. If it is not connected, reconnect. 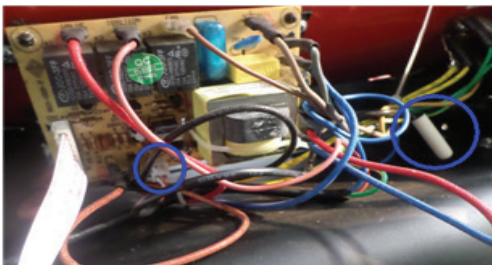

9. WARRANTY

Any claim under this warranty must be made within 12 months of the date of purchase of the product. To make a claim under the warranty, take the product (with proof of purchase) to the store where you purchased the product or go to https://www.fanmaster.com.au/warranty-claims-returns.

This warranty is given by Fanmaster Pty Ltd
ABN: 45 353 934 457
Unit 1/6-8 Yalgar Rd, KIRRAWEE NSW 2232
P: 1300 900 345
E: warranties@fanmaster.com.au

This warranty is provided in addition to other rights and remedies you have under law: Our goods come with guarantees which cannot be excluded under the Australian Consumer Law. You are entitled to replacement or refund for a major failure and to compensation for other reasonably foreseeable loss or damage. You are also entitled to have the goods repaired or replaced if the goods fail to be of acceptable quality and the failure does not amount to a major failure.

Exclusions: This warranty does not cover:

- Any defects caused by an accident, misuse, abuse, improper installation or operation, lack of reasonable care, unauthorized modification, loss of parts, tampering or attempted repair by a person not authorized by the distributor.
- Any product that has not been installed, operated or maintained to a satisfactory level.
- Any damage caused by improper power input or improper cable connection.

FANMASTER
COOLING HEATING VENTILATION EXTRACTION

Fanmaster Pty Ltd | 1/6-8 Yalgar Road, KIRRAWEE NSW 2232
1300 900 345 | sales@fanmaster.com.au | www.fanmaster.com.au

N11664
MADE IN CHINA